16.888
ESD.77

Multidisciplinary System Design Optimization (MSDO)

Decomposition and Coupling

Lecture 4

17 February 2004

Olivier de Weck

Today's Topics

Last time discussed standard approach: Sequential modular analysis (Lecture 3).

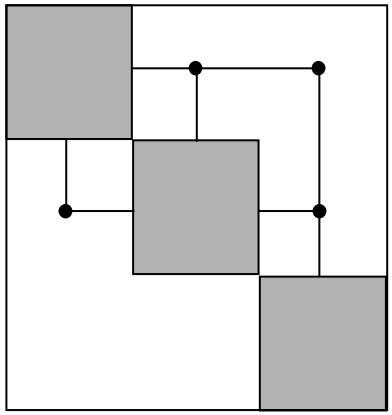

Modules are executed sequentially with or without feedback loops.

Other Approaches:

- MDO frameworks
  - Distributed analysis
  - Distributed design

Fundamentally different approaches in MDO

Distributed Analysis

-disciplinary models provide analysis

-all optimization done at system level

non-hierarchical decomposition

hierarchical decomposition

Distributed Design

-provide disciplinary models with design tasks

-optimization at subsystem and system levels

CSSO

CO

BLISS

Standard Optimization Problem

Given

$$x \in \mathbb{R}^n$$

$$J : \mathbb{R}^n \to \mathbb{R}$$

$$g : \mathbb{R}^n \to \mathbb{R}^m$$

Solve the problem

$$\min J(x)$$

$$\text{s.t.} \quad g(x) \geq 0$$

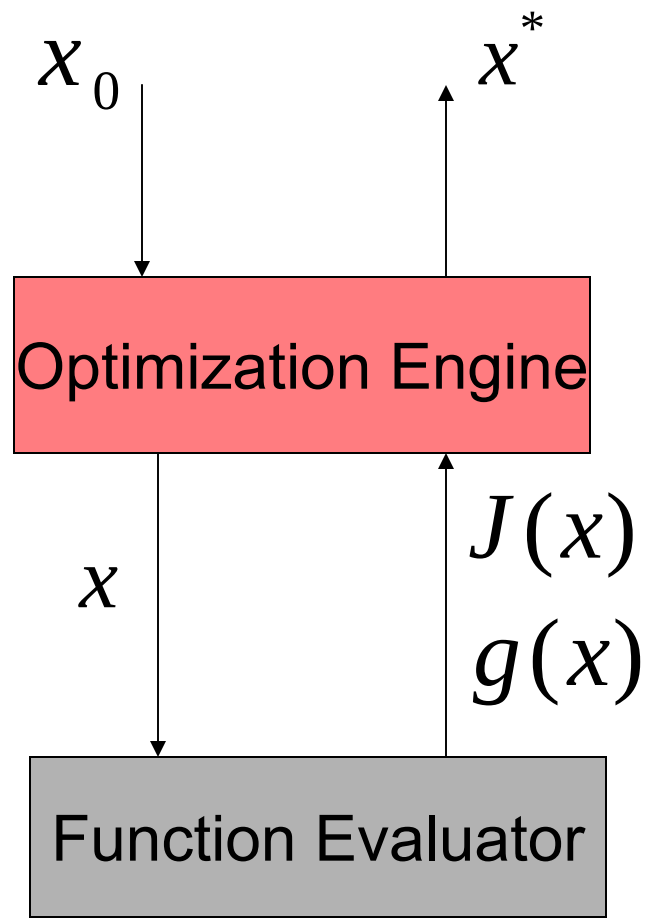

That is, find x^* s.t. $J(x^*) \leq f(x), \ \forall x \in \mathrm{dom}(J) \cap \mathrm{dom}(g)$

Distributed Analysis

- Disciplinary models provide analysis
- Optimization is controlled by some overseeing code or database

e.g. GenIE database system (Stanford)
ISight (Optimizer)

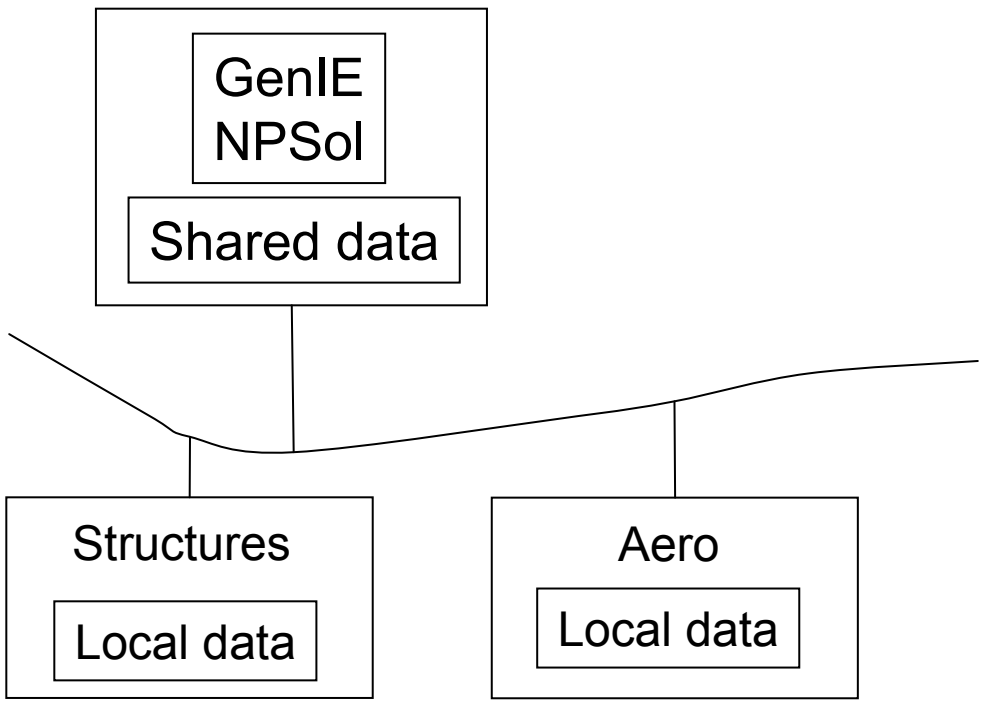

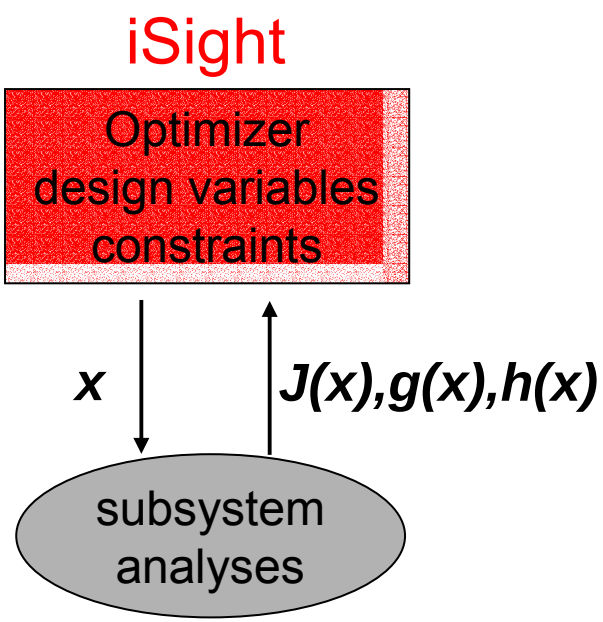

Distributed Analysis

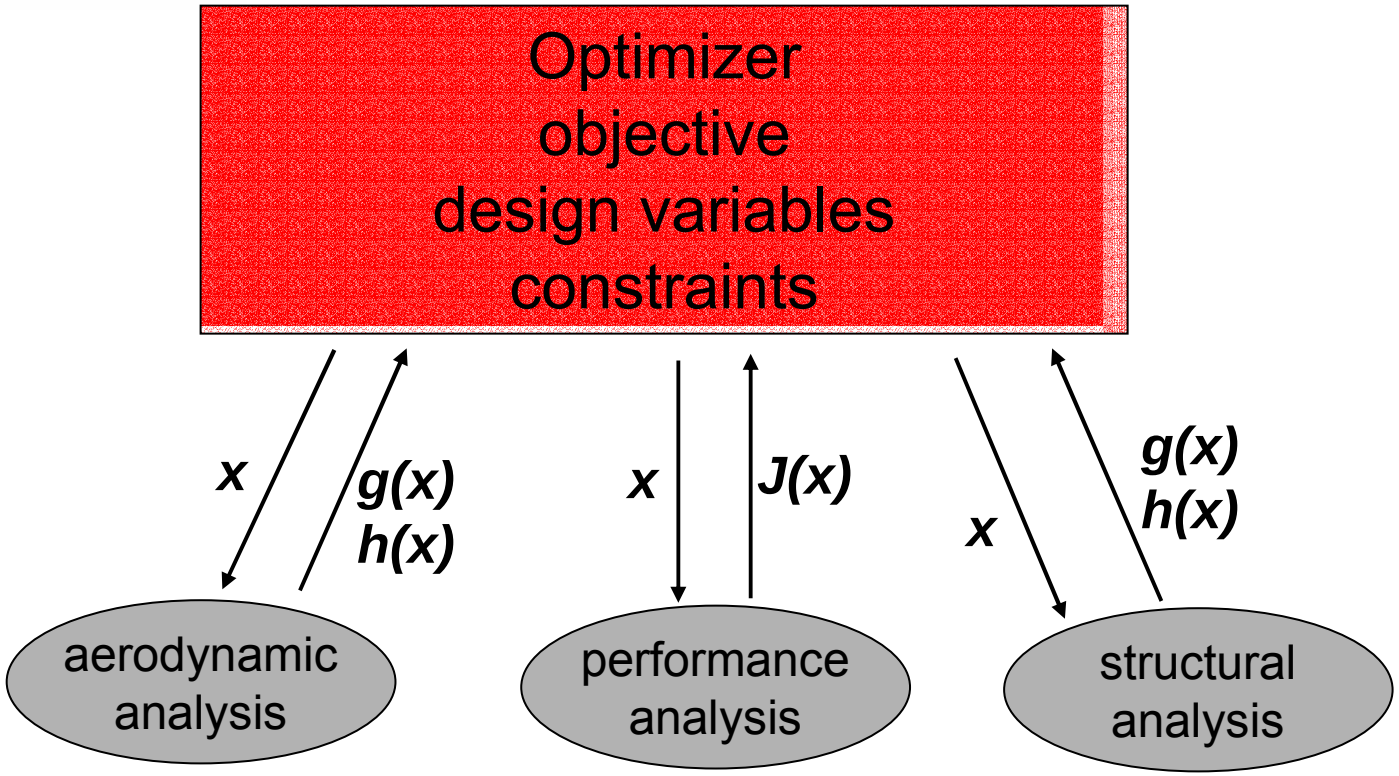

- During the optimization, the overseeing code keeps track of the values of the design variables and objective
- The values of the design variables are changed according to the optimization algorithm
- Disciplinary models are asked to evaluate constraints/objective

Distributed Design

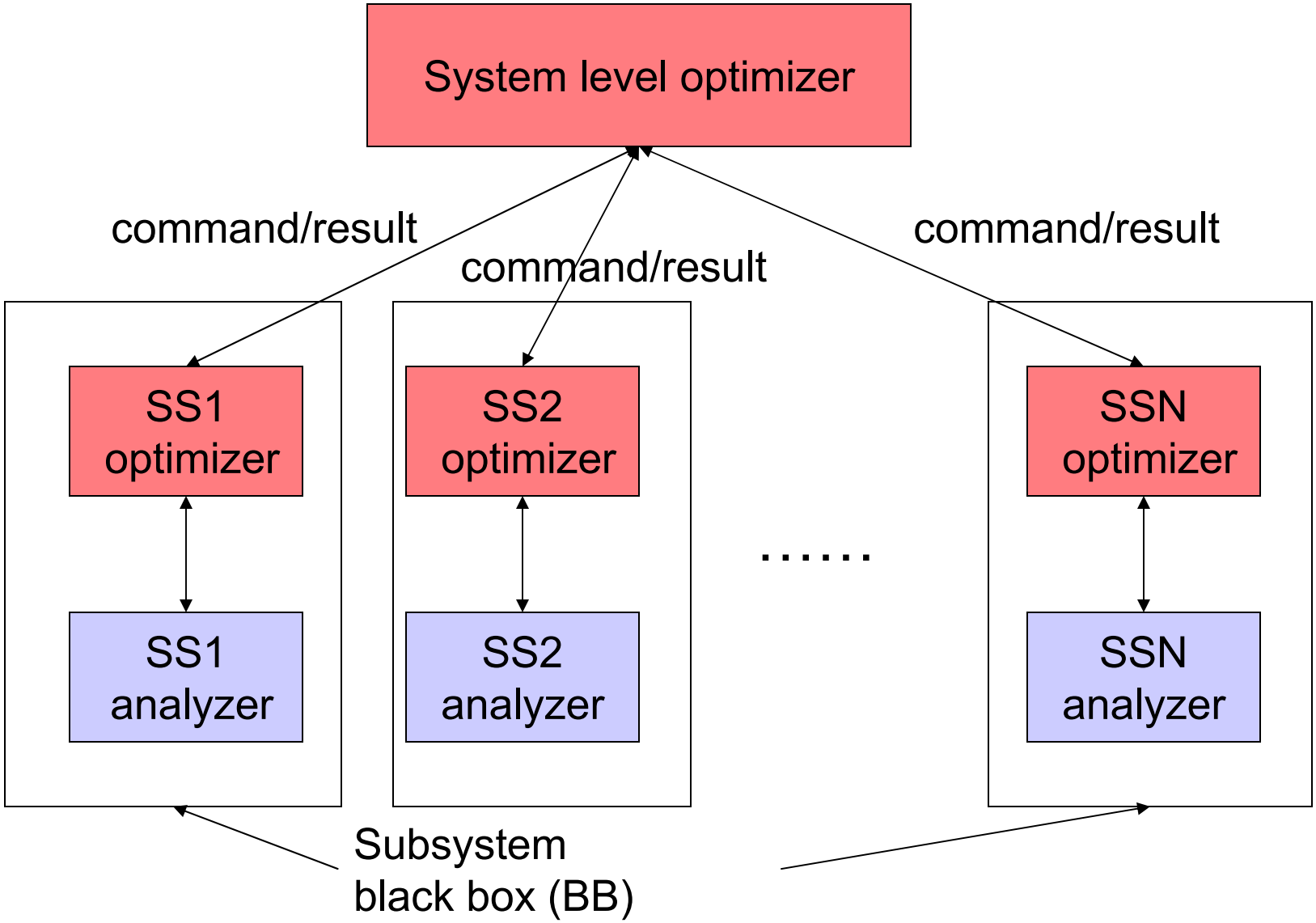

Advantages of Decoupling

Computation of *g(x)* can be very time consuming, want to divide the work and compute in parallel.

For example, if $x = (x_1, x_2),\ \text{where } x_1 \in \mathbb{R}^{n1}, x_2 \in \mathbb{R}^{n2}$

$$\text{and } g(x) = (g_1(x_1), g_2(x_2))$$

Then g_1 and g_2 can be computed in parallel. Graphically,

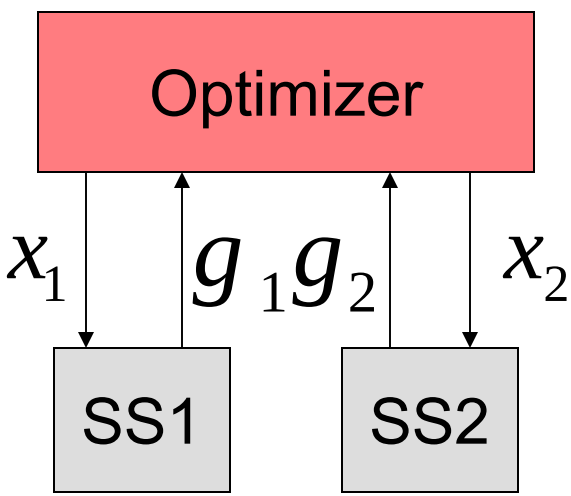

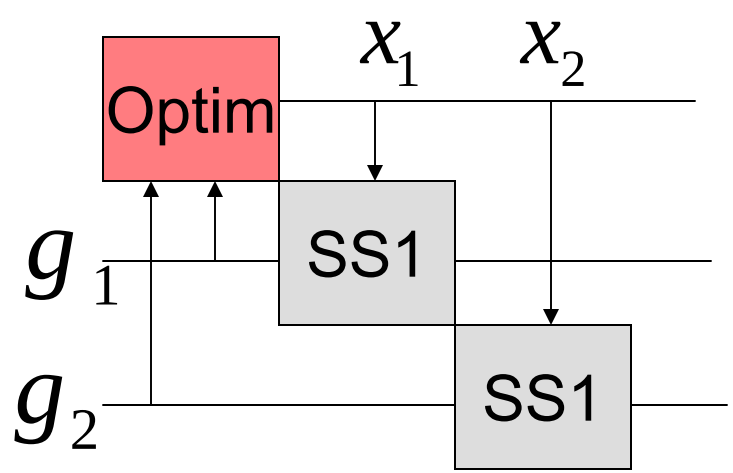

Coupled Situation

The decoupled constraints assumption is not general. Subsystems can be coupled and loops can arise. For example,

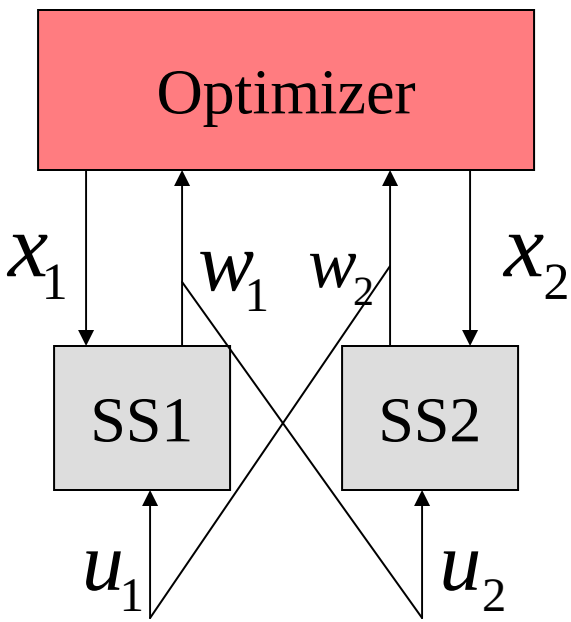

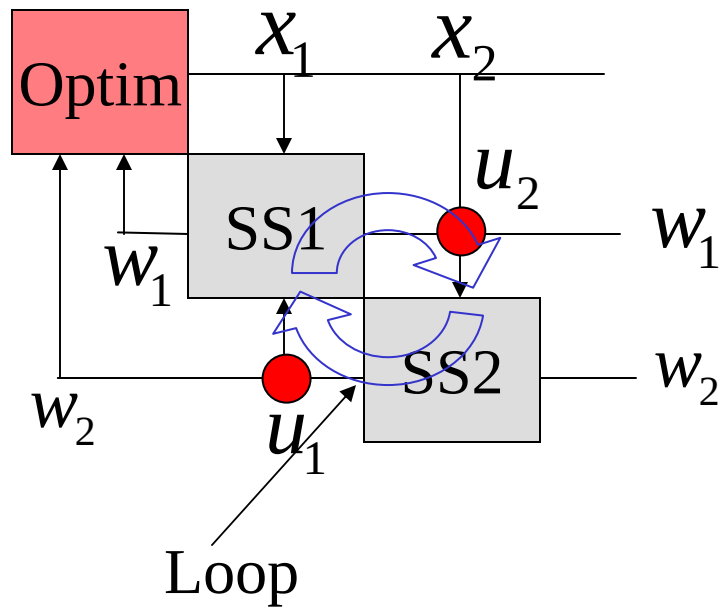

x: decision variables
w: SS outputs (constraint, cost)
u: SS input (dependent)

vline: SS input
hline: SS output

Computation of w_1 and w_2 requires an iterative method.

Information Flow Loop (2)

- An example where such a loop happens is as follows:

$$\min J(x_1, x_2)$$

$$\text{s.t.} \quad \begin{aligned} w_1 &= g_1(x_1, g_2(x_2, w_1)) \geq 0 \\ w_2 &= g_2(x_2, g_1(x_1, w_2)) \geq 0 \end{aligned}$$

where $x_1 \in \mathbb{R}^{n1}, x_2 \in \mathbb{R}^{n2}, g_i : x_i \times \ _i \mapsto w_i, i = 1, 2$

- w_1 and w_2 satisfy coupled relations at each optimization iteration. At each constraint evaluation, nonlinear equations must be solved (e.g. by Newton's method) in order to obtain w_1 and w_2, which can be time consuming.

Want a way to return to the situation of decoupled constraints.

Surrogate Variables ("Tearing")

Information loop can be broken by introducing surrogate variables.

$$\min J(x_1, x_2)$$

$$\text{s.t.} \quad \begin{aligned} w_1 &= g_1(x_1, g_2(x_2, w_1)) \geq 0 \\ w_2 &= g_2(x_2, g_1(x_1, w_2)) \geq 0 \end{aligned}$$

$$\Rightarrow$$

$$\begin{aligned} &\min J(x_1, x_2) \\ &\text{s.t.} \\ &g_1(x_1, u_1) \geq 0 \\ &g_2(x_2, u_2) \geq 0 \\ &u_2 - g_1(x_1, u_1) = 0 \\ &u_1 - g_2(x_2, u_2) = 0 \end{aligned}$$

- u_1 and u_2 are decision variables acting as the inputs to g1(SS1) and g2 (SS2). Introducing surrogate variables breaks information loop but increases the number of decision variables.

Numerical Example

$$\min J_1 + J_2$$
$$\text{s.t.} \quad w_1 \geq 0$$
$$w_2 \geq 0$$

where $J_1 = x_1^2 + x_2^2$

$$J_2 = (x_3 - 3)^2 + (x_4 - 4)^2$$
$$w_1 = x_1^3 - x_2^3 + 2w_2$$
$$w_2 = x_3^3 - x_4^3 + 2w_1$$

decoupled

$$\min x_1^2 + x_2^2 + (x_3 - 3)^2 + (x_4 - 4)^2$$
$$\text{s.t.} \quad w_1 = x_1^3 - x_2^3 + 2x_5 \geq 0$$
$$w_2 = x_3^3 - x_4^3 + 2x_6 \geq 0$$
$$x_1^3 - x_2^3 + 2x_5 - x_6 = 0$$
$$x_3^3 - x_4^3 + 2x_6 - x_5 = 0$$

coupled

$$\min x_1^2 + x_2^2 + (x_3 - 3)^2 + (x_4 - 4)^2$$
$$\text{s.t.} \quad w_1 = g_1(x_1, x_2, x_3, x_4) \geq 0$$
$$w_2 = g_2(x_1, x_2, x_3, x_4) \geq 0$$

Solution:

$$x = (0, 0, 4, 3, 12\tfrac{1}{3}, 24\tfrac{2}{3})$$

MATLAB 5.3

coupled: 356,423 FLOPS 4.844s
uncoupled: 281,379 FLOPS 0.453s

Distributed Design Methods

- Disciplinary models are provided with design tasks
- Optimization is performed at a subsystem level in addition to the system level

Concurrent Subspace Optimization (CSSO)

- divide the design problem into several discipline-related subspaces
- each subspace shares responsibility for satisfying constraints while trying to reduce a global objective

Collaborative Optimization (CO)

- disciplinary teams satisfy local constraints while trying to match target values specified by a system coordinator
- preserves disciplinary-level design freedom

Collaborative Optimization

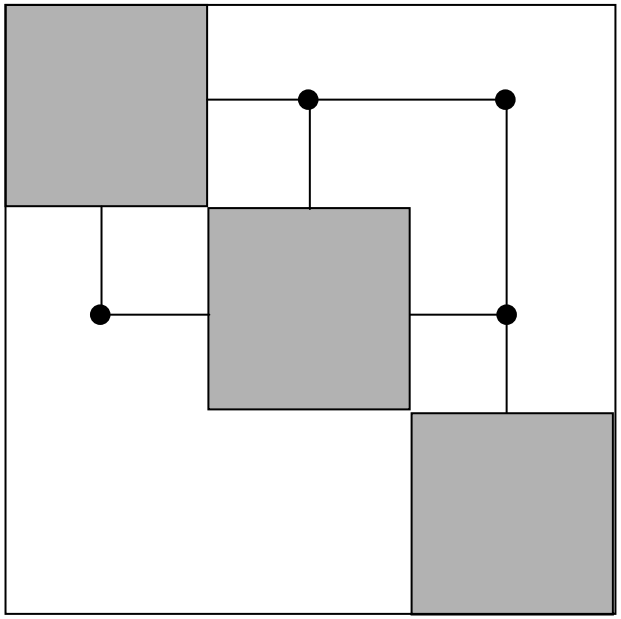

Coupled

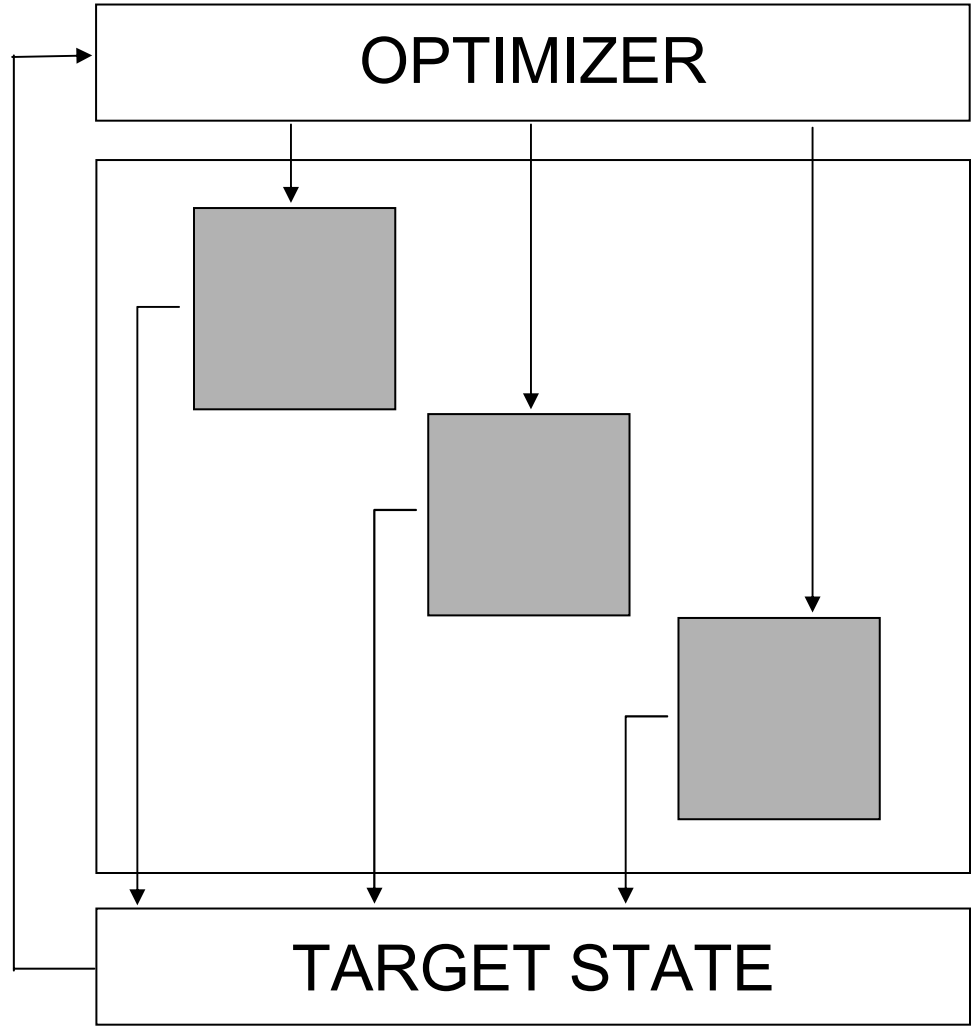

Uncoupled

Collaborative Optimization

Two levels of optimization:

- A system-level optimizer provides a set of targets.
  - These targets are chosen to optimize the system-level objective function
- A subsystem optimizer finds a design that minimizes the difference between current states and the targets.
  - Subject to local constraints

Collaborative Optimization

$$\min J_{sys}$$
$$\text{wrt: } \mathbf{x}_0 = \{\text{target variables}\}$$
$$\text{s.t. } J_k = 0 \quad \forall \text{ subproblems}_k$$

$\{\mathbf{x}_0\}$ →

← J_{sys}

performance analysis

$\{\mathbf{x}_0\}$ ↙ ↗ J_1

$\{\mathbf{x}_0\}$ ↘ ↖ J_k

$$\min J_1 = \left\{ \begin{matrix} \text{target} \\ \text{variables} \end{matrix} - \begin{matrix} \text{local} \\ \text{variables} \end{matrix} \right\}^2$$
$$\mathbf{x} = \{\text{local variables}\}$$
$$\text{s.t. } \{\text{local constraints}\}$$

$$\min J_k = \left\{ \begin{matrix} \text{target} \\ \text{variables} \end{matrix} - \begin{matrix} \text{local} \\ \text{variables} \end{matrix} \right\}^2$$
$$\mathbf{x} = \{\text{local variables}\}$$
$$\text{s.t. } \{\text{local constraints}\}$$

$\{\mathbf{x}\}$ ↓ ↑ *computed results*

analysis for subsystem 1

$\{\mathbf{x}\}$ ↓ ↑ *computed results*

analysis for subsystem *k*

CO – Subsystem Level

$$\min J_1 = \left\{ \begin{matrix} \text{target} \\ \text{variables} \end{matrix} - \begin{matrix} \text{local} \\ \text{variables} \end{matrix} \right\}^2$$

$$\mathbf{x} = \{\text{local variables}\}$$

$$\text{s.t. } \{\text{local constraints}\}$$

- The subsystem optimizer modifies local variables to achieve the best design for which the set of local variables and computed results most nearly matches the system targets
- The local constraints must also be satisfied

CO – System Level

$$\begin{aligned} &\min J_{sys} \\ &\text{wrt: } \mathbf{x}_0 = \{\text{target variables}\} \\ &\text{s.t. } J_k = 0 \quad \forall \text{ subproblems}_k \end{aligned}$$

- System-level optimizer changes target variables to improve objective and reduce differences J_k
  - $J_k=0$ are called compatibility constraints
  - compatibility constraints are driven to zero, but may be violated during the optimization
  - CO may therefore discover parts of the design space that cannot be reached by sequential optimization

CO Example: Aircraft Design

Consider a simple aircraft design problem:
maximize range for a given take-off weight by choosing wing area, aspect ratio, twist angle, L/D, and wing weight.

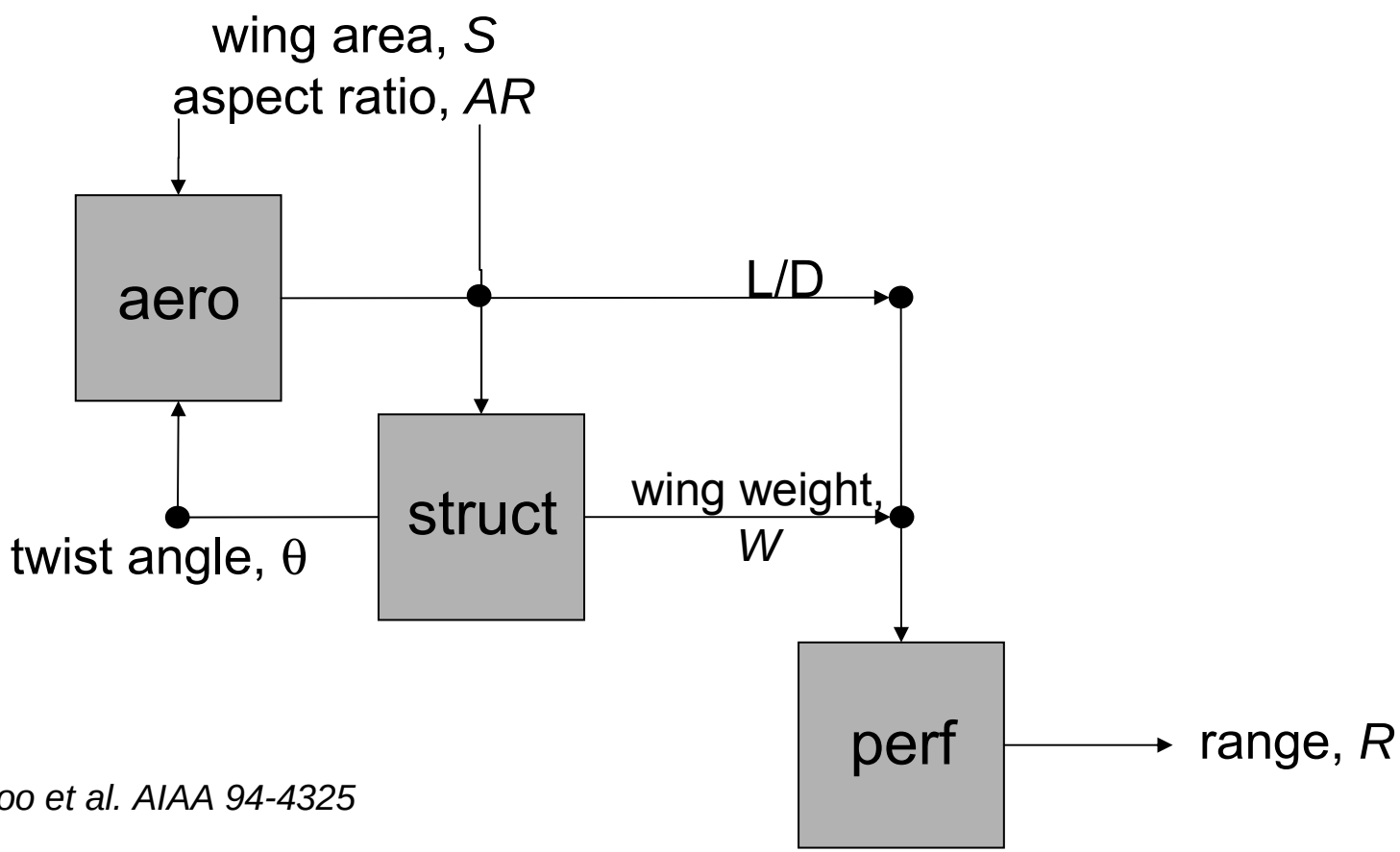

modified from Kroo et al. AIAA 94-4325

CO Example: Aircraft Design

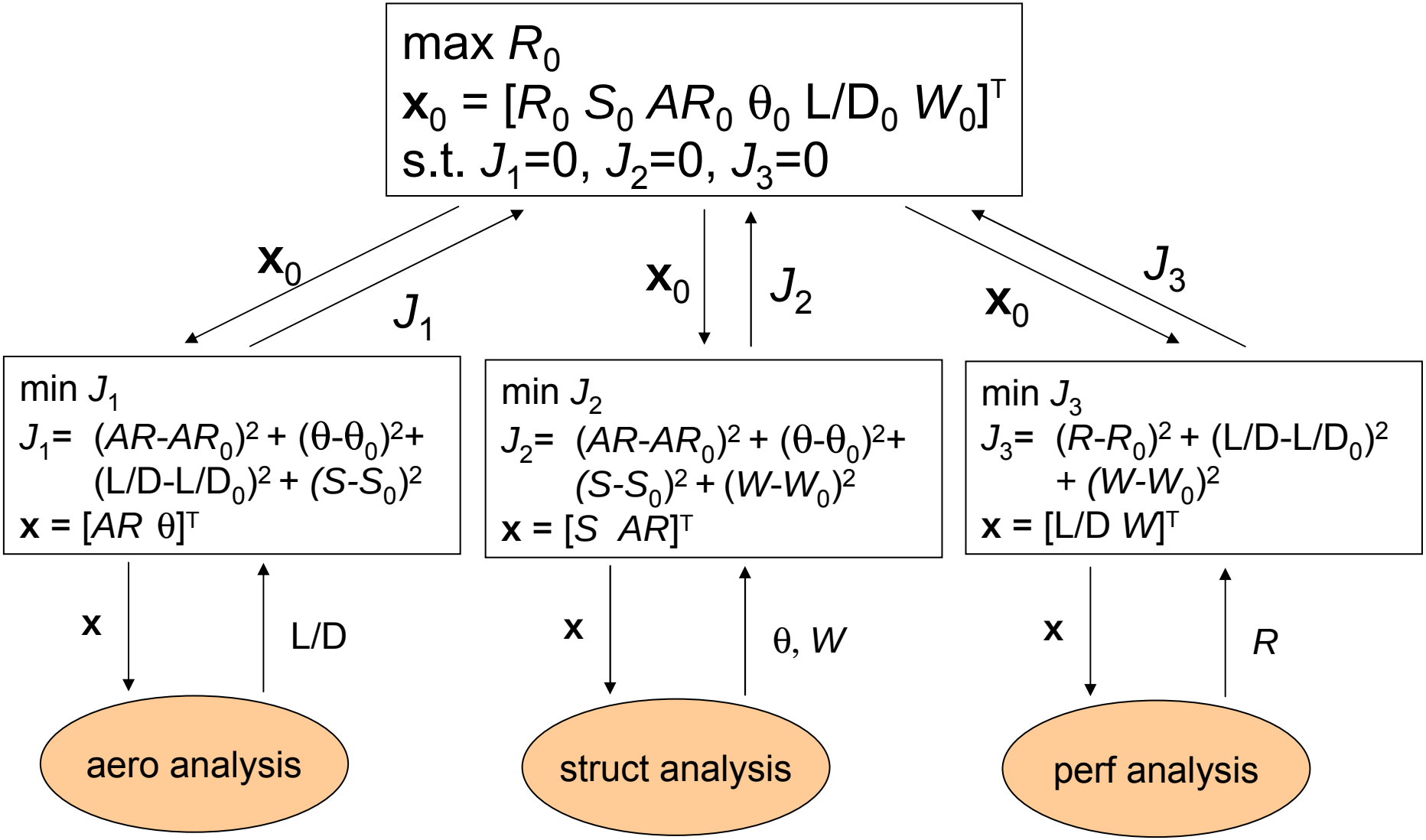

Collaborative Optimization

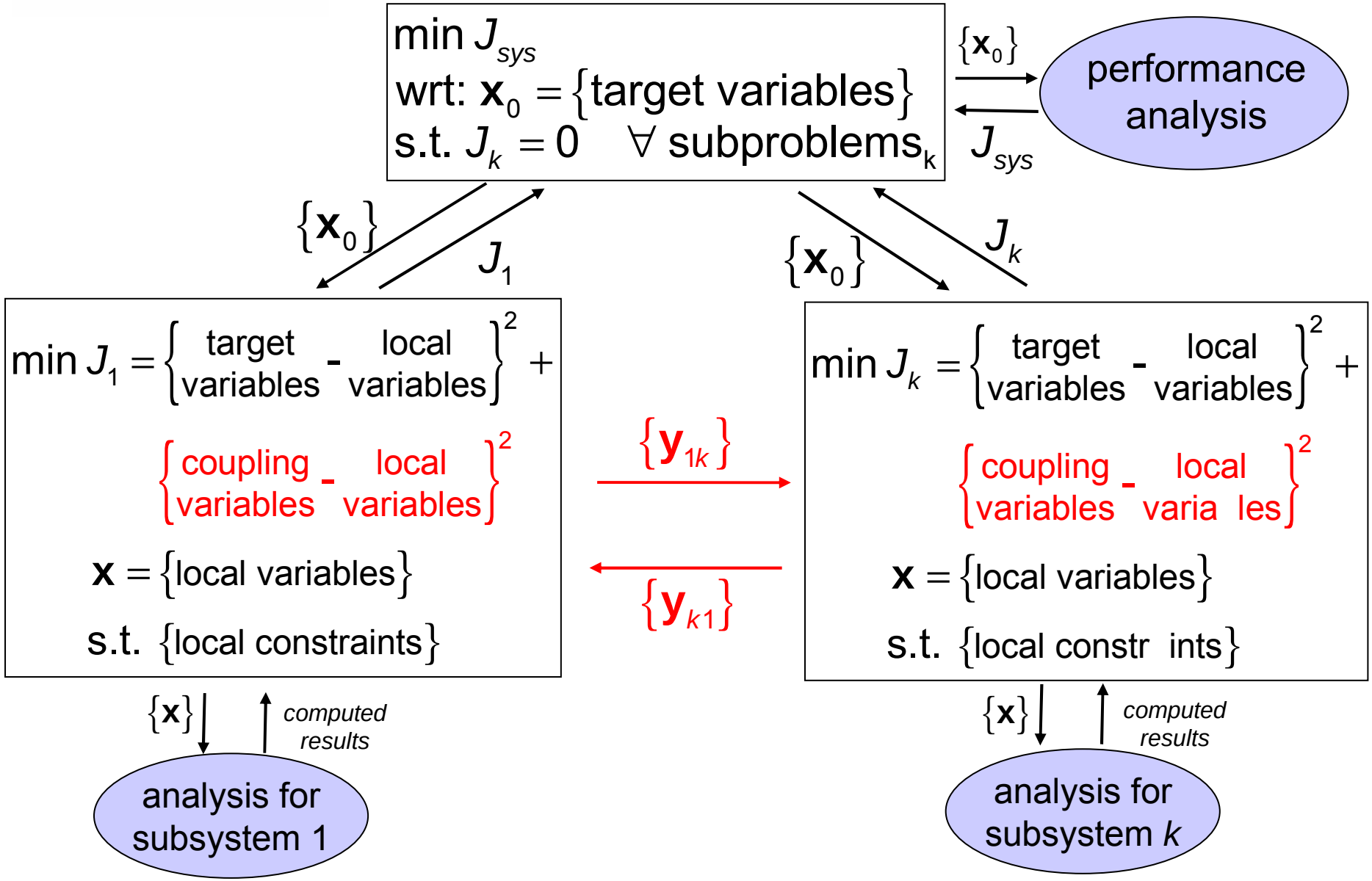

Collaborative Optimization

$\mathbf{x}_0$ = system-level target variable values

$\mathbf{x}$ = subsystem local variables

$\mathbf{y}_{ij}$ = coupling functions

- $\mathbf{y}_{ij}$ =outputs of subsystem *j* which are needed as inputs to subsystem *i*.
- Coupling equations must also be satisfied, so coupling variables are included in subsystem objective.
- Used to reduce the number of system-level parameters.

BLISS 2000 Schematic

$$Q_i = \left\{ X_{sh}, Y^*_{BBi}, w_{BBi} \right\}$$

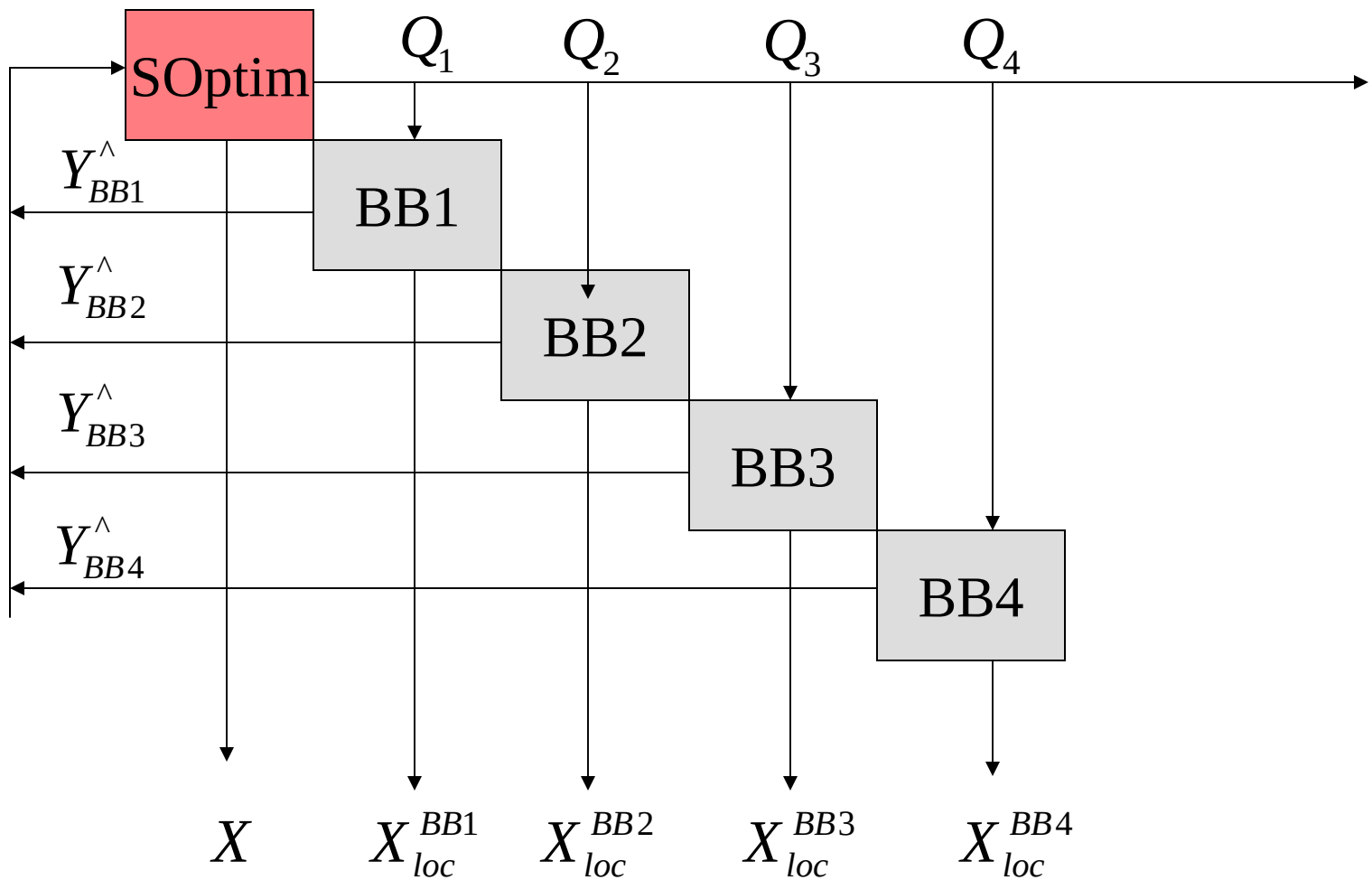

Black Box (BB)

A black box has the following properties:

1. BB has its own local variables (Xloc) and has the exclusive right to determine Xloc. Xloc is a subset of decision variables that can appear explicitly only in the associated BB.
2. BB must satisfies its constraints at each system level iteration.
3. BB operates independently of other BB's. Neither its inputs nor its outputs are directly communicated between other BB's. Also, BB assumes no knowledge (e.g. Xloc) of other BB's. Instead, BB connection is done implicitly via the system optimizer, by the use of Y*.
4. Computation methods within a BB are not restricted by BLISS. (It can be simulation or just an intelligent guess.)

BLISS 2000 Formulation

- BLISS is a bi-level optimization algorithm. The subsystem optimization formulation is as follows:

Given: $Q = \{X_{sh}, Y^*, w\}$

variables: $U = \{X_{loc}, Y^\wedge\}$

$$\min: \; f(U) = \sum_i w_i Y_i^\wedge$$

$$\text{s.t.} \quad g(U) \le 0, \text{ for each BB}$$

$$h(U) = 0, \text{ for each BB}$$

$$U_l \le U \le U_u$$

output: $Y^\wedge$

keep: X_{loc}

X_{sh} : share decision variable

Y^* : input to BB from other BB (surrogate var)

w: weight used in BB optimization

X_{loc} : local decision variable

$Y^\wedge$: output of BB (to system and/or other BB)

$g(\bullet)$: BB inequali y constraints

$h(\bullet)$: BB equality constraints

U_{lower} : lower bound on local variables

U_{upper} : upper bound on local variables

Insert – Slides by Dr. Sobieski

Wing drag and weight both influence the flight range R.

R is the system objective

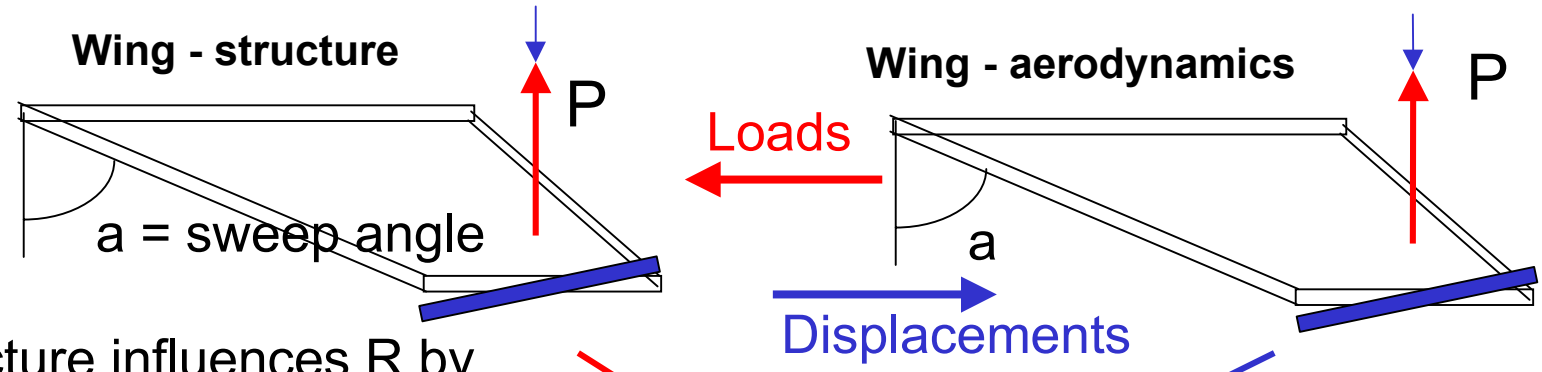

- Structure influences R by
  - directly by weight
  - indirectly by stiffness that affect displacements that affect drag

Loads & Displacements must be consistent

$$R = (k/\text{Drag})\ \text{LOG}\ [(W_o + W_s + W_f)/(W_o + W_s)]$$

- Dilemma: **What to optimize the structure for? Lightness?**
  Displacements = 1/Stiffness?
  An optimal mix of the two?

Trade-off between opposing objectives of lightness and stiffness

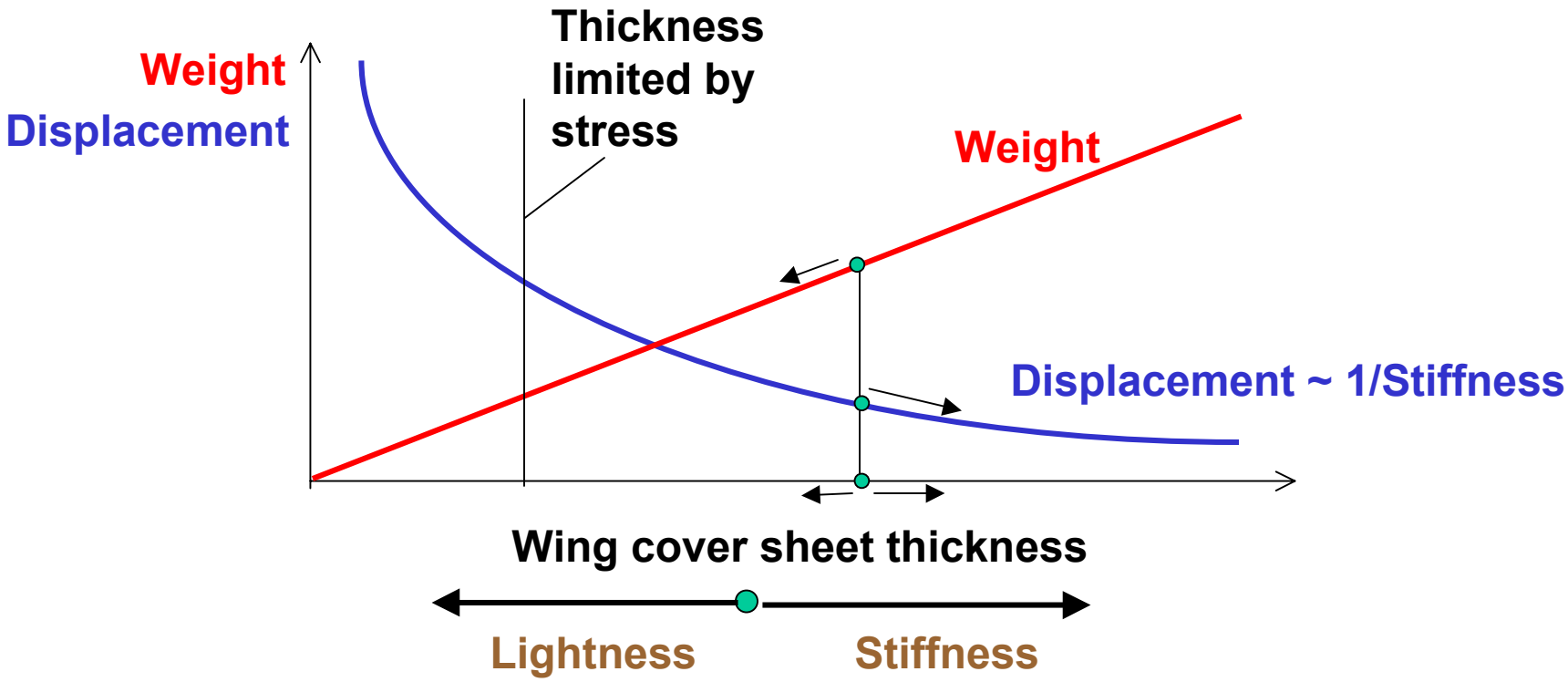

- **What to optimize for?**
- **Answer: minimum of** f = w1 Weight + w2 Displacement
- **vary w1, w2 to generate a population of wings of diverse Weight/Displacement ratios**
- Let system choose w1, w2.

Approximations

- a.k.a. Surrogate Models

- Why Approximations:

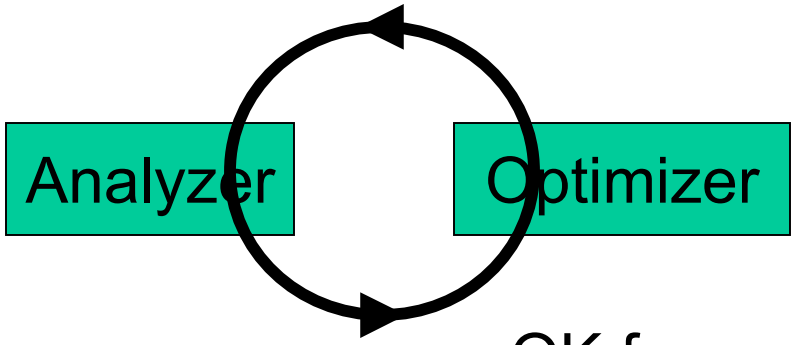

- OK for small problems

$$

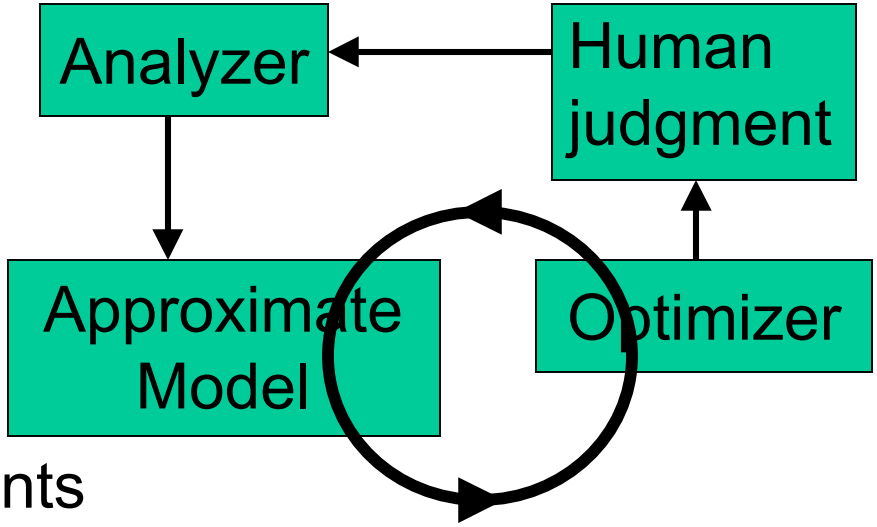

cents

- Now-standard practice for large problems to reduce and control cost

Design of Experiments(DOE) & Response Surfaces (RS)

- RS provides a "domain guidance", rather than local guidance, to system optimizer

DOE

•Placing design points in design space in a pattern

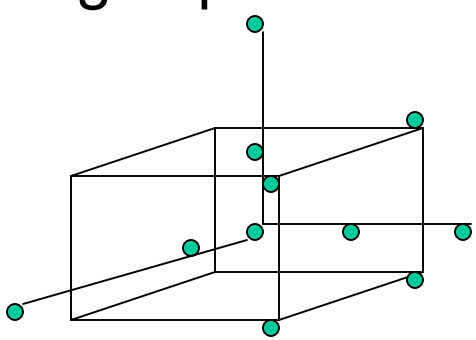

•Example: Star pattern (shown incomplete)

RS

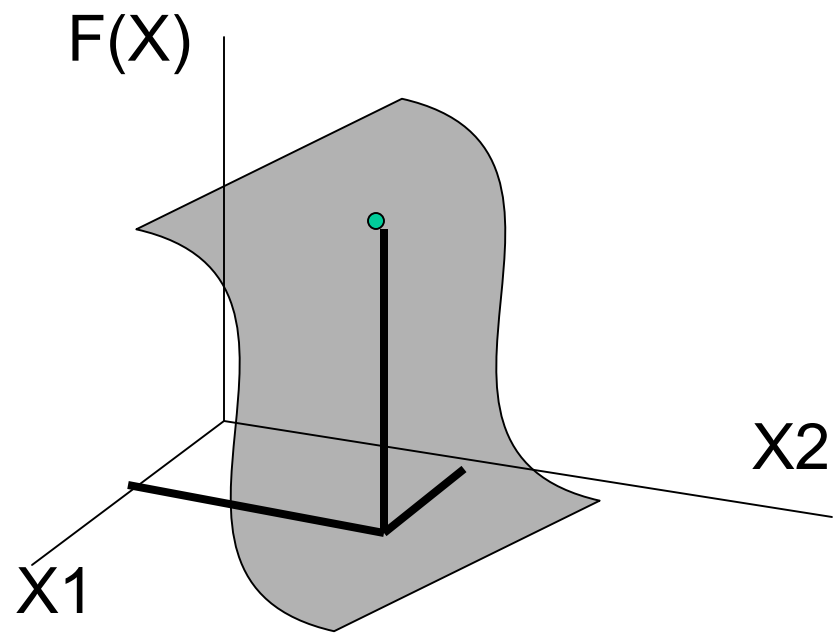

$F(X) = a + \{b\}'\{X\} + \{X\}'[c]X$

•quadratic polynomial

•hundreds of variables

BLISS 2000: MDO Massive Computational Problem Solved by RS (or alternative approximations)

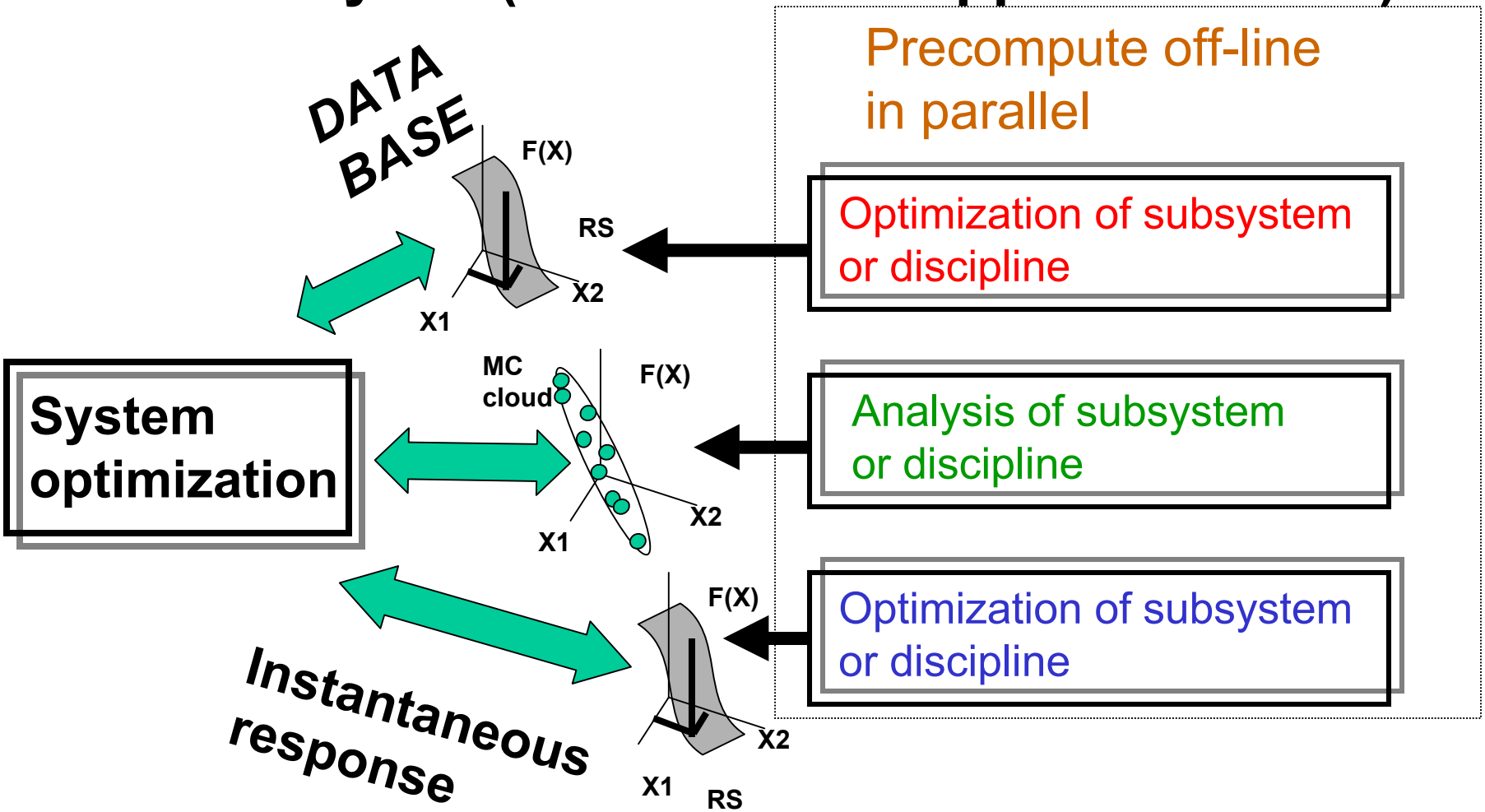

- **Radical conceptual simplification at the price of a lot more computing. Concurrent processing exploited.**

Coupled System Sensitivity

- Consider a multidisciplinary system with two subsystems A and B (e.g. Aero. & Struct.)
  - system equations can be written in symbolic form as

$$A[(X_A, Y_B), Y_A] = 0$$

$$B[(X_B, Y_A), Y_B] = 0$$

  - rewrite these as follows

$$Y_A = Y_A(X_A, Y_B)$$

$$Y_B = Y_B(X_B, Y_A)$$

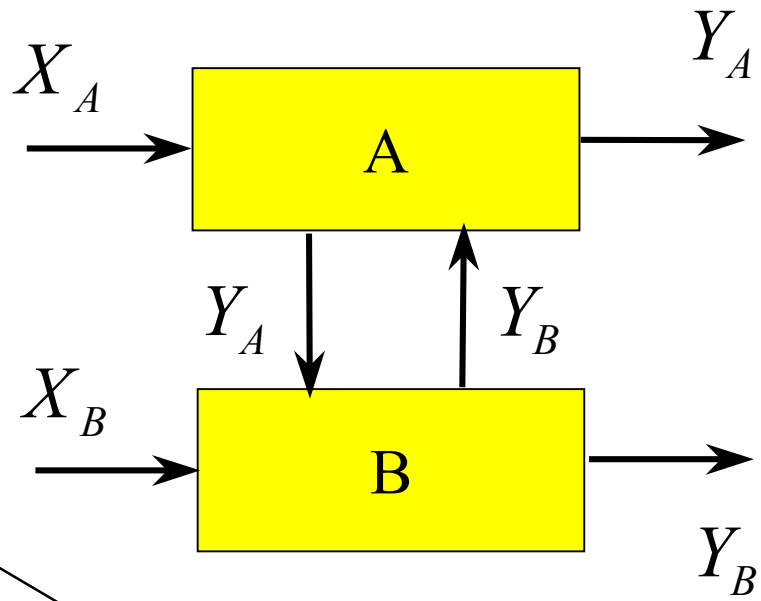

these governing equations define

as implicit functions.
Implicit Function Theorem applies.

Coupled System Sensitivity - Equations

- These equations can be represented in matrix notation as

$$\begin{bmatrix} I & -\dfrac{\partial Y_A}{\partial Y_B} \\ -\dfrac{\partial Y_B}{\partial Y_A} & I \end{bmatrix} \begin{Bmatrix} \dfrac{dY_A}{dX_A} \\ \dfrac{dY_B}{dX_A} \end{Bmatrix} = \begin{Bmatrix} \dfrac{\partial Y_A}{\partial X_A} \\ 0 \end{Bmatrix}$$

$$\begin{bmatrix} I & -\dfrac{\partial Y_A}{\partial Y_B} \\ -\dfrac{\partial Y_B}{\partial Y_A} & I \end{bmatrix} \begin{Bmatrix} \dfrac{dY_A}{dX_B} \\ \dfrac{dY_B}{dX_B} \end{Bmatrix} = \begin{Bmatrix} 0 \\ \dfrac{\partial Y_B}{\partial X_B} \end{Bmatrix}$$

same matrix

different Right Hand Sides

- Total derivatives can be computed if partial sensitivities computed in each subsystem are known

  Linear, algebraical equations with multiple RHS

Flowchart of the System Optimization Process

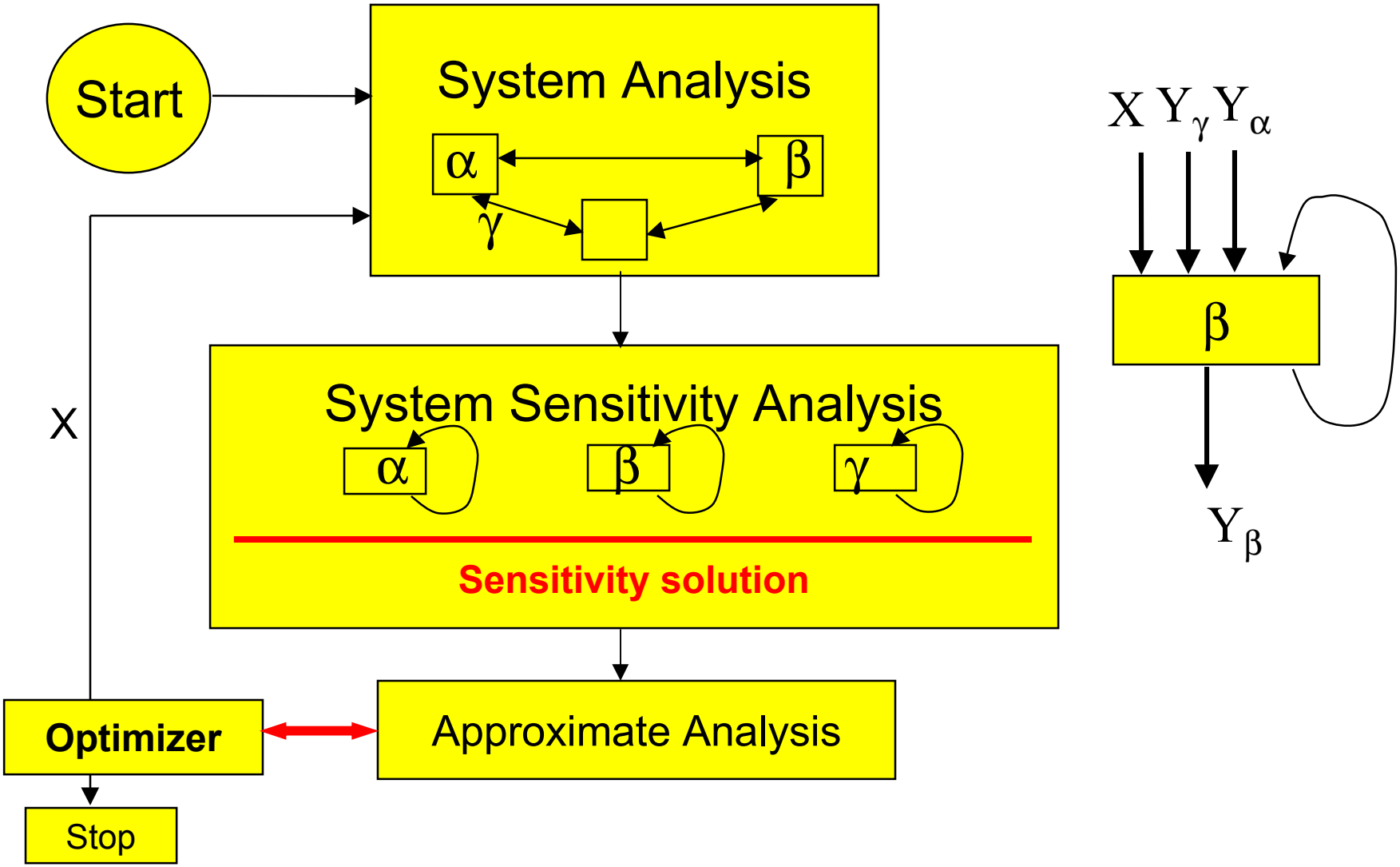

Courtesy of Jaroslaw Sobieski. Used with permission.

System Internal Couplings Quantified

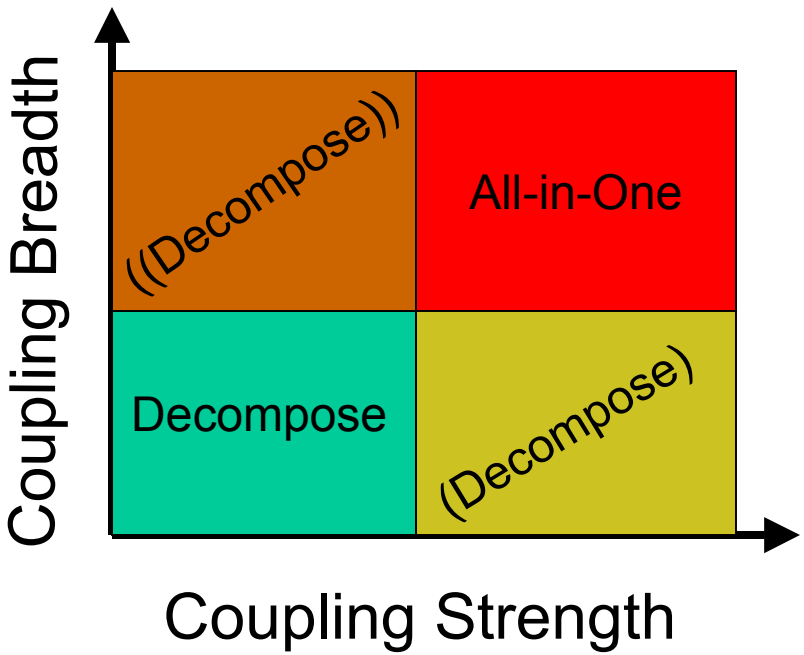

- Strength: relatively large
  ∂ YO/ ∂YI
- Breadth:
  {YO} and {YI} are long
  [∂ YO/ ∂YI] large and full

Supersonic Business Jet Test Case

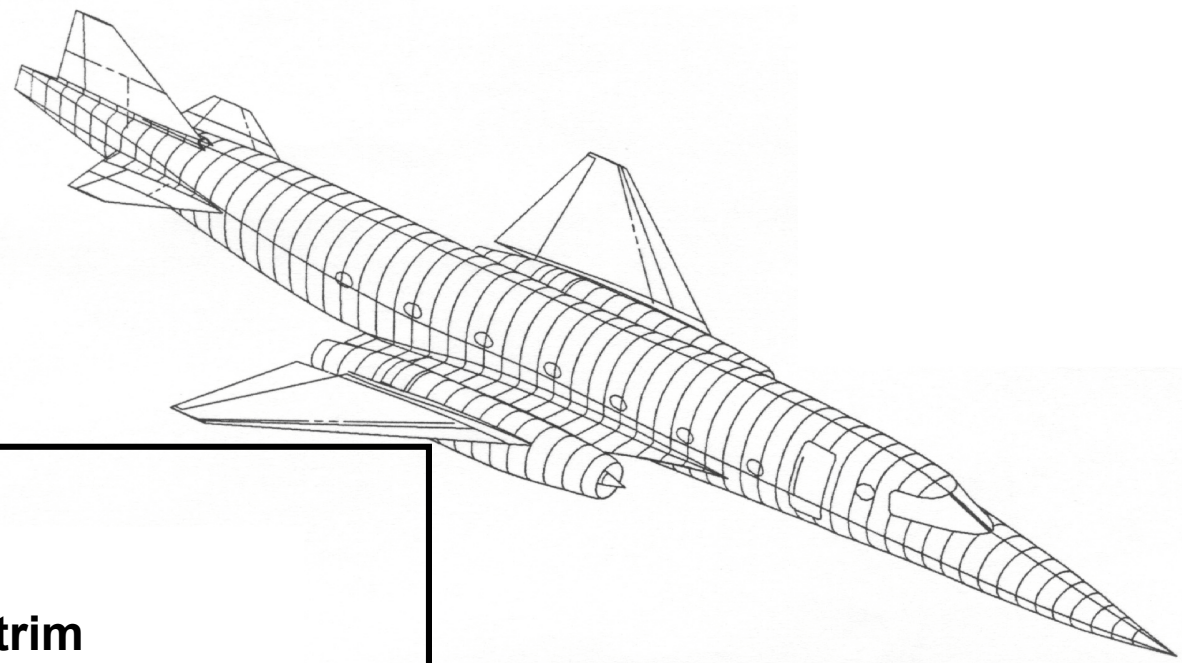

- **Structures (ELAPS)**
- **Aerodynamics (lift, drag, trim supersonic wave drag by A - Wave)**
- **Propulsion (look-up tables)**
- **Performance (Breguet equation for Range)**

Examples: **Xsh - wing aspect ratio, Engine scale factor**
Xloc - wing cover thickness, throttle setting
Y - aerodynamic loads, wing deformation.

<u>Some stats</u>:

Xlocal: struct. 18
aero 3
propuls. 1
X shared: 9
Y coupl.: 9

System of Modules (Black Boxes) for Supersonic Business Jet Test Case

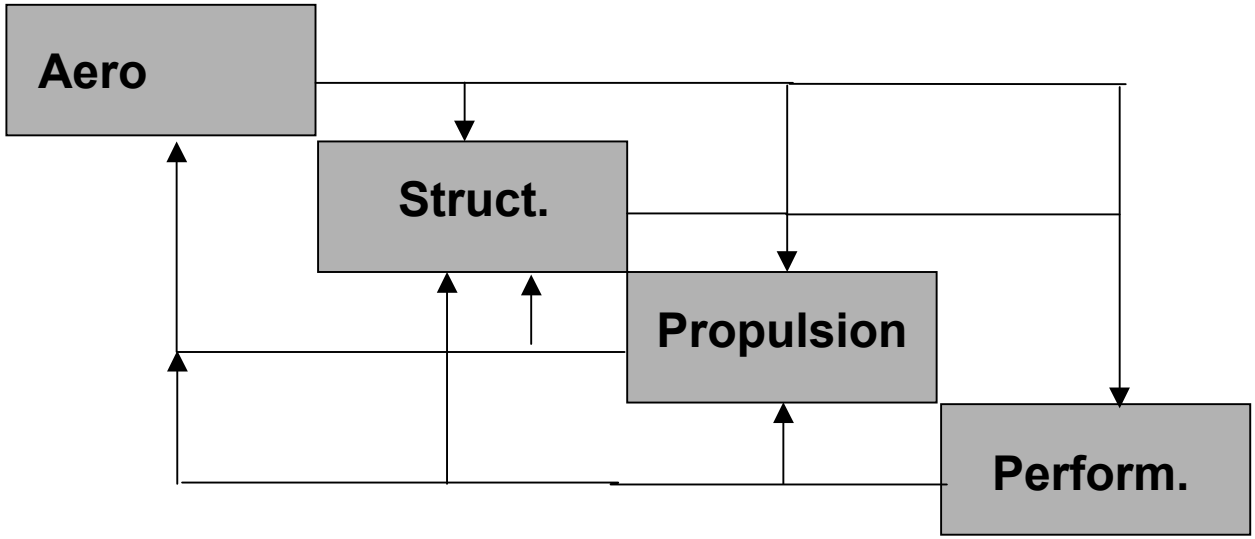

- **Data Dependence Graph**
- **RS - quadratic polynomials, adjusted for error control**

Flight Range as the Objective

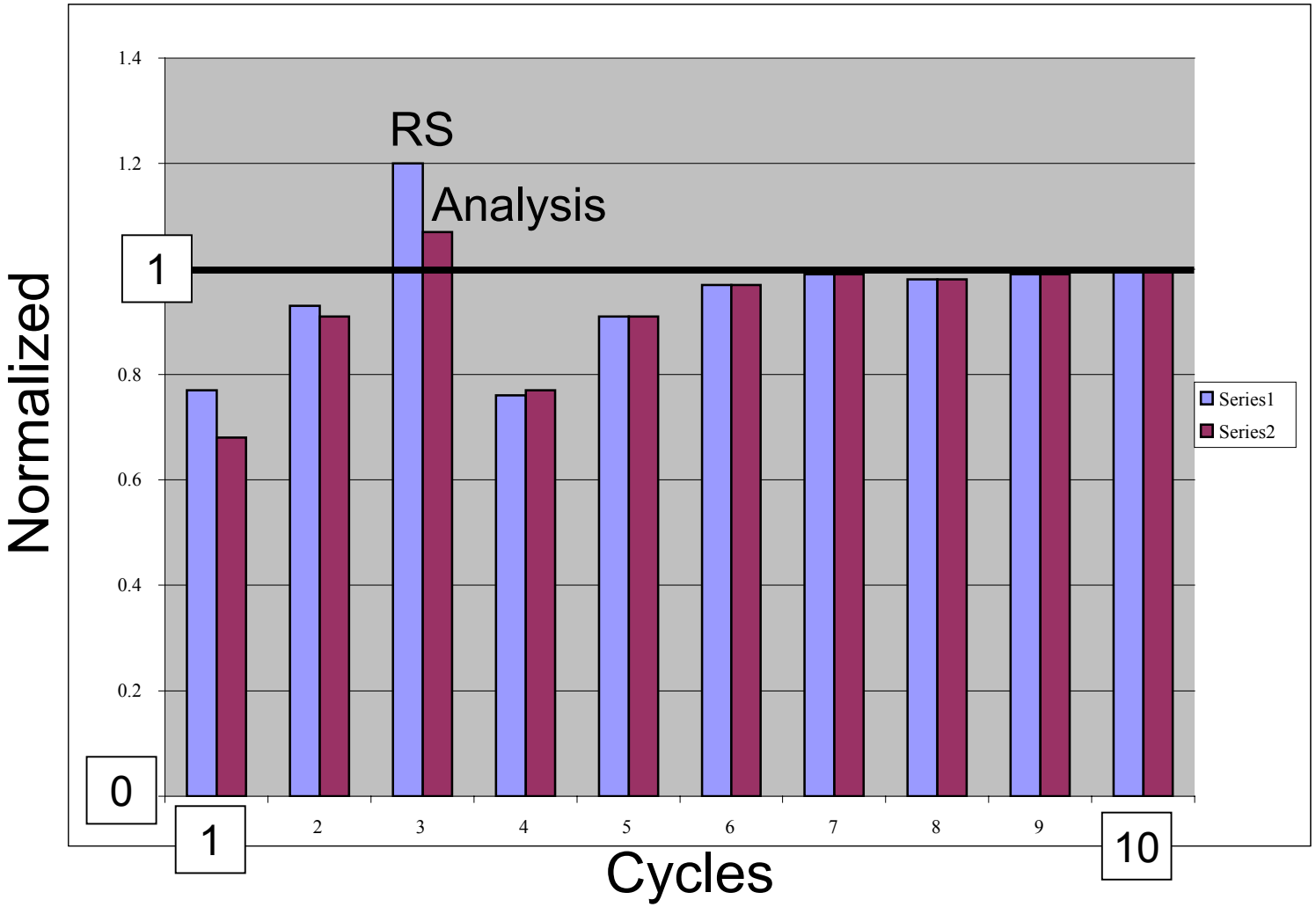

- Histogram of RS predictions and actual analysis for Range

References (I)

Jaroslaw, Sobieszczanski-Sobieski et al. *Bi-level Intergrated System Synthesis (BLISS) For Concurrent And Distributed Processing*. AIAA 2002-5409.

Updated Journal Article (handout):

Jaroslaw Sobieski, Altus, Phillips, Sandusky, "Bi-level Integrated System Synthesis for Concurrent and Distributed Processing" AIAA Journal, Vol. 41, No.10, October 2003, pp. 1996-2003

I.P. Sobieski and I.M. Kroo. *Collaborative Optimization Using Response Surface Estimation*. AIAA Journal Vol. 38 No. 10. Oct 2000.

R.D. Braun and I.M. Kroo. *Development and Application of the Collaborative Optimization Architecture in a Multidisciplinary Design Environment*. ICASE/NASA Langley Workshop on MDO, March 13-16, 1995

Erin J. Cramer et al. *Problem Formulation for Multidisciplinary Optimization*. SIAM Journal of Optimization. Vol. 4, No. 4 pp. 754-776, Nov 1994

Natalia M. Alexandrov (ed). *Multidisciplinary Design Optimization – State of the Art*. SIAM. 1994.

References (II)

Kroo, I.: “MDO applications in preliminary design: status and directions,” AIAA Paper 97-1408, 1997.

Kroo, I. and Manning, V.: “Collaborative optimization: status and directions,” AIAA Paper 2000-4721, 2000.

Sobieski, I. and Kroo, I.: “Aircraft design using collaborative optimization,” AIAA Paper 96-0715, 1996.

Balling, R. and Wilkinson, C.: “Execution of multidisciplinary design optimization approaches on common test problems,” AIAA Paper 96-4033, 1996.

Giesing, J. and Barthelemy, J.: “A summary of industry MDO applications and needs”, AIAA White Paper, 1998.

AIAA MDO Technical Committee: “Current state-of-the-art in multidisciplinary design optimization”, 1991.

“Optimal Design in Multidisciplinary Systems,” AIAA Professional Development Short Course Notes, September 2002.